ITEM NO.	PART NUMBER	Revision	DESCRIPTION	QTY	MATERIAL
1	DWGR-5018-007	A	FRAME ASSEMBLY - 7' GATE	1	SEE BOM
2	DWGR-3018-001	B	7.313" DIA X 0.25" CAP	1	.250 STEEL SHEET
3	DWGR-3018-040	B	PIPE, DRIVEWAY GATE	1	6.875 ID X .375 WALL STEEL PIPE
4	DWGR-3018-207	A	ANGLED FRAME SUPPORT - 7' GATE	1	3.00 X 1.50 X .075 WALL RECTANGULAR STEEL TUBING

TOLERANCES:
UNLESS OTHERWISE SPECIFIED
X.X = ±1/8
X.XX = ±1/16
X.XXX = ±1/32
ANGLES = ±5°

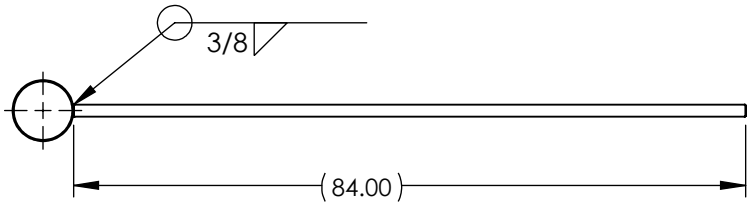

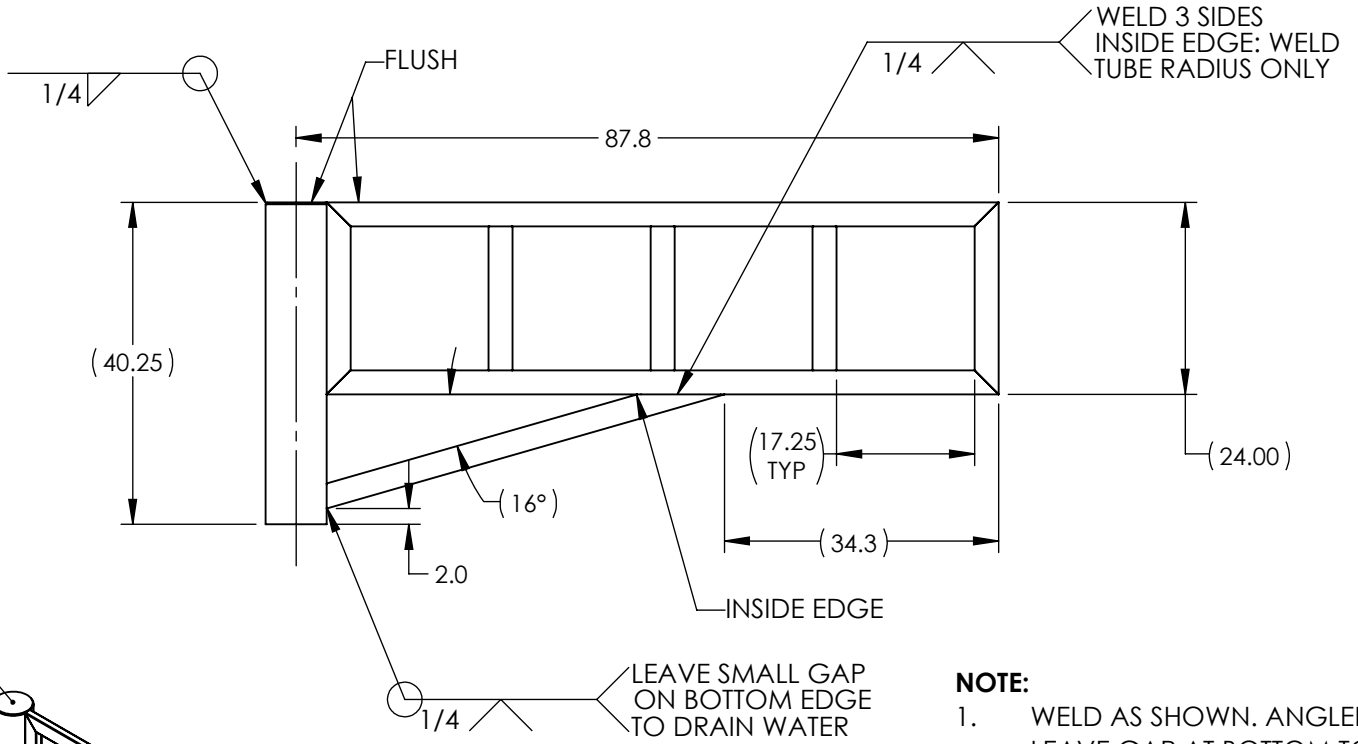

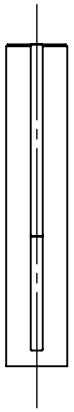

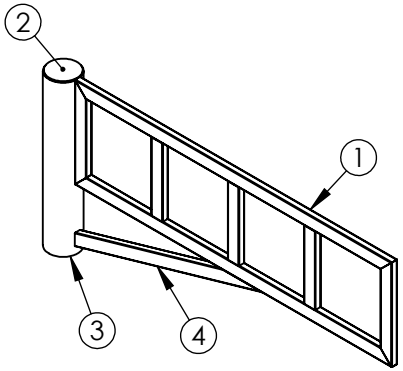

NOTE:

1. WELD AS SHOWN. ANGLED SUPPORT IS NOT WELDED ALL AROUND. LEAVE GAP AT BOTTOM TO ALLOW POTENTIAL WATER TO DRAIN.
2. POWDER COAT SAFETY YELLOW (T9-YW1)

PROPRIETARY AND CONFIDENTIAL
This drawing and the information contained theron is the poperty of: SAVETY YELLOW PRODUCTS, a Division of D K Gentile & Company, Inc. Copying this drawing or using the information for any other reasons, other than their intended purpose, is considered a violation of U S Copyright laws and patent infringement and will be vigorously prosecuted. This drawing is subject to return upon demand.

	NAME	DATE
DRAWN	J WEST	10/01/2021
CHECKED	D GENTILE	11/01/2021

MATERIAL: SEE BOM

DO NOT SCALE DRAWING

"Save"ty Yellow Products
Gentile & Company, Inc.
West, Chicago, IL
877-"Save"ty1

DESCRIPTION: **7' STEEL DRIVEWAY GATE**

SIZE: A | DWG. NO.: **DWGR-8018-007** | REV.: C

PROCESS NO.: **FINISH PRING**

SHEET 1 OF 1